Pond Light

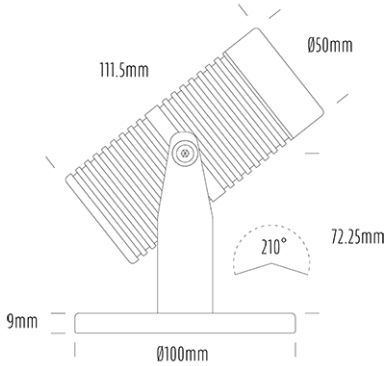

SPECIFICATIONS

Product Code	AQL-540
Family	Phoenix
Construction Material	Solid Cast Brass
Cable	5m Aqualux 2-Core Silicone / PTFE Cable
IP Rating	IP68
Warranty	5 Year Aqualux Warranty

CONFIGURED OPTIONS

Variant Code	AQL-540-B1D007RD10S
Body Colour	Brushed Chrome
Control Gear	24VAC Triac Dimmable
Rated Power	7W
Nominal Lumens	280 lm
CCT / Colour	Red 630nm
Optical	10
CRI	00
Other	5m Aqualux Cable
Dimming	Yes, TRIAC Primary Side

INTRODUCTION

Made from cast brass for the best possible durability underwater or in harsh coastal environments the AQL-540 is the ultimate pond light.

1300 662 644
sales@aqualux.com.au

Telectran International Pty Ltd. PO Box 6059, Unit 4/12a Rodborough Road, Frenchs Forest NSW 2086 Australia.
ABN 42 062 816 426. Telephone +612 9454 7900. All specifications subject to change. Copyright © 2021.